Live Camera Feed

In this section, you can learn how to connect to the hotspot generated by the ESP32S3-Cam, and then log into a provided URL to view the live camera feed.

Note: if you are unable to use the live camera feed function or have downloaded other program firmwares, please reflash the image transmission firmware. This allows you to use the live camera feed function.

To download the firmware, please refer to "2. Image Postback Firmware Flashing (Optional)" in this section.

---

1. ESP32S3-Cam Camera Connection

1.1 Connection Modes Introduction

ESP32S3-Cam has two kinds of network modes as follows:

① AP direct connection mode: the development board can open the hotspot to connect with the phone, but it cannot connect to an external network.

② STA LAN mode: the development board can actively connect to a designated hotspot or Wi-Fi, enabling communication with an external network.

The AP direct connection mode is more convenient to operate. We recommend you to first learn the configuration method of the direct connection mode to experience the corresponding functions. The STA LAN mode can be selected according to your needs.

No matter which kind of mode you choose, the game function is the same.

1.2 Direct Mode Connection (Must Read)

1) Make sure the camera is connected to the I2C interface on the expansion board and turn the robotic hand on.

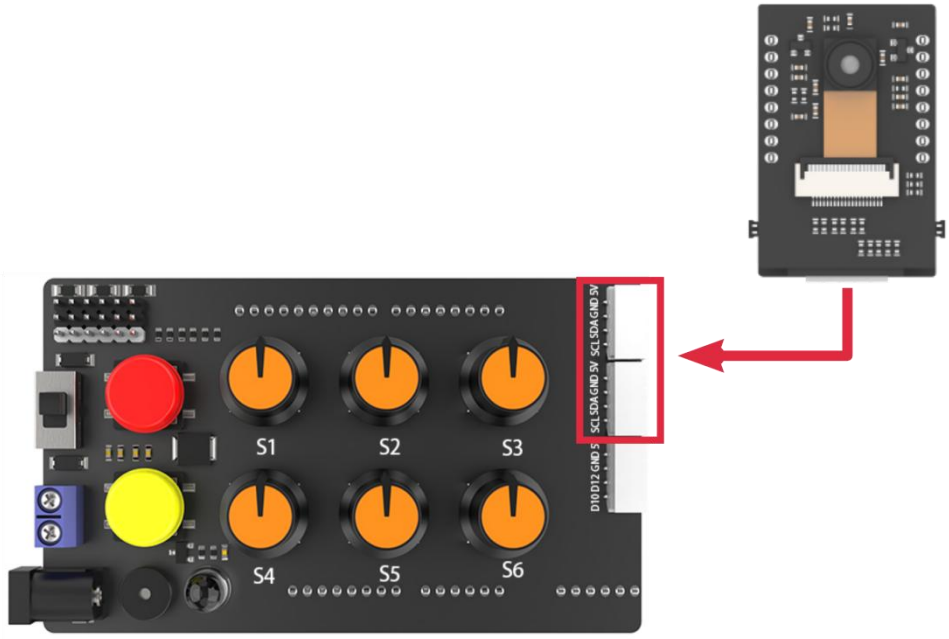

2) The camera will generate a hotspot named “HW_ESP32Cam”. Click to connect.

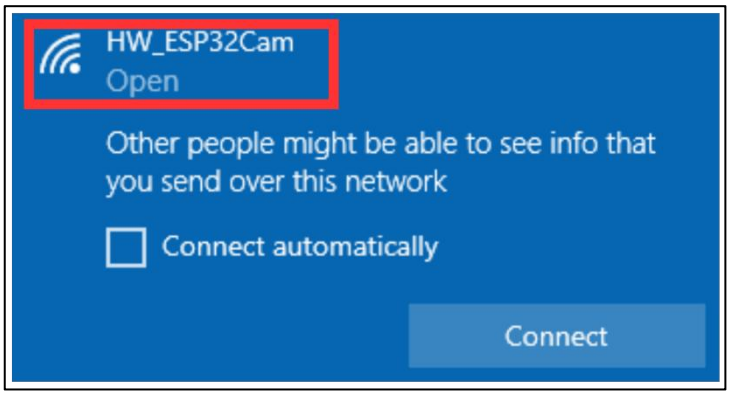

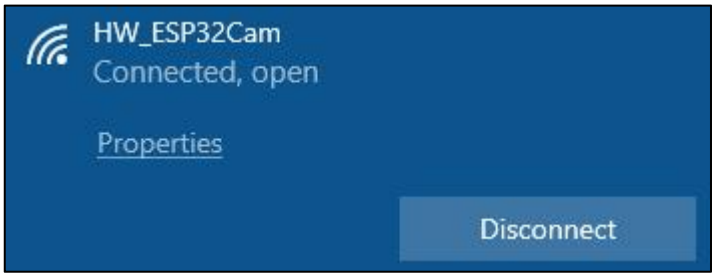

3) After the connection is completed, enter the address “192.168.5.1” in the browser and click Start Stream to enter the camera transmission

interface.

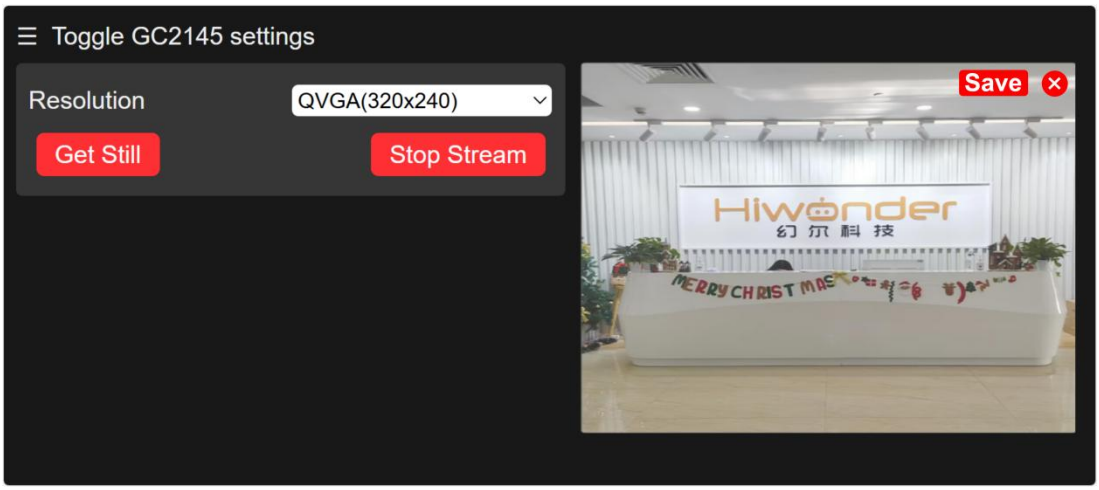

1.3 LAN Mode Connection (Optional)

1) Turn on your phone's hotspot and set the name as “HiwonderESP” and the password as “Hiwonder”. Note: the name and password of the hotspot should be same as of this text, otherwise the connection won't succeed.

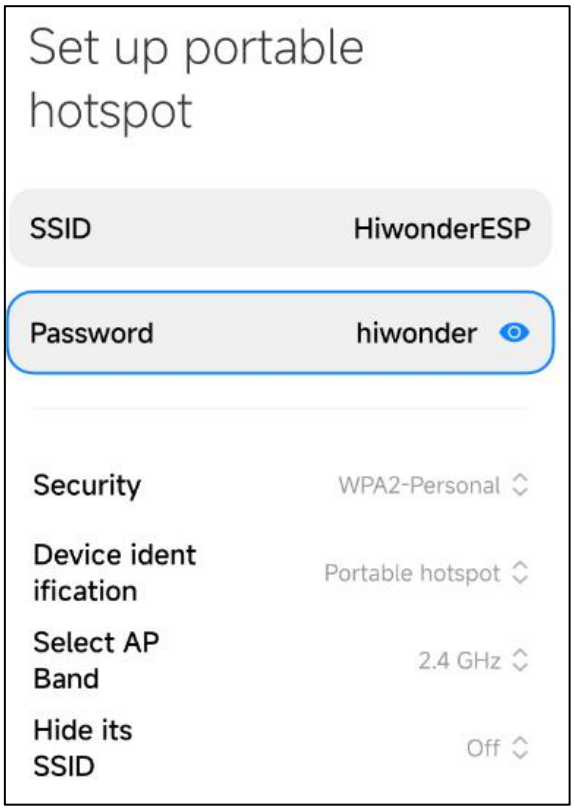

2) Ensure the camera is connected to the I2C interface on the expansion board, power on the robotic hand and wait for a moment. The camera will automatically connect to the phone's hotspot.

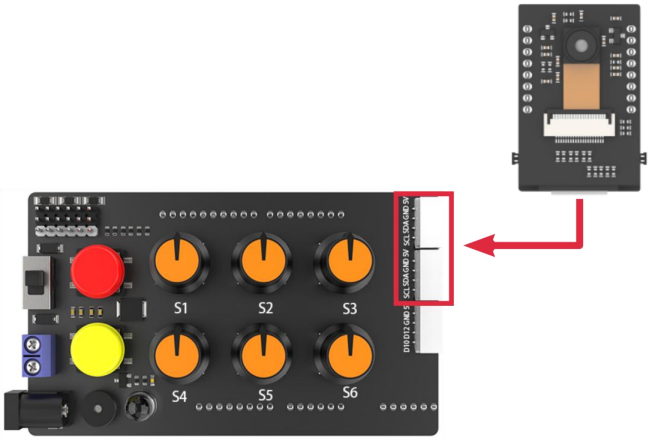

3) After that, connect the camera to the computer with the Type-C cable.

4) Open the serial port utility tool in the path of “2. Software Tools\5. Serial Port Utility”.

5) Select a port. Take COM3 as example. The port number may vary. Do not choose COM1 which is the system communication port. Set the baudrate as “115200”.

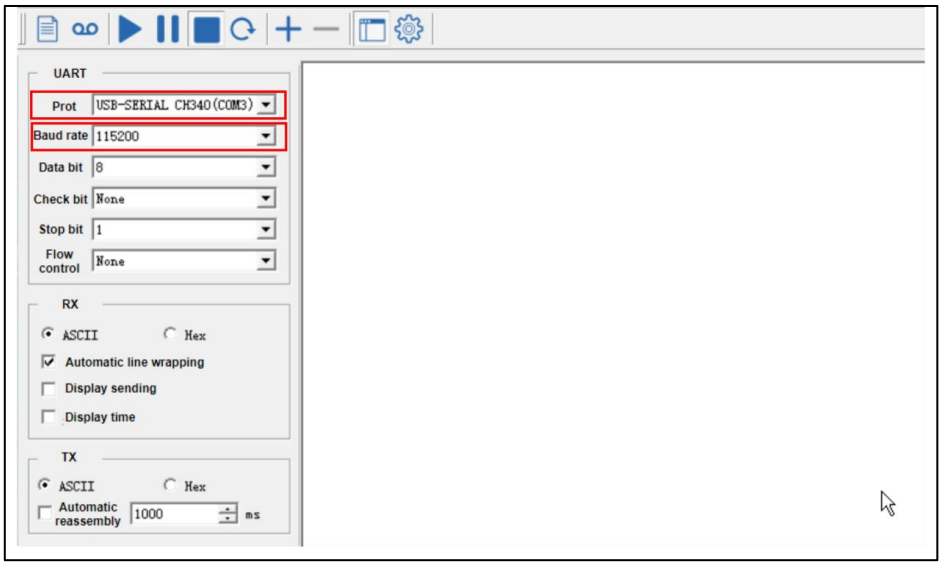

6) Click at the upper left of the page to open the serial port communication. Press the “RST” button on the ESP32S3-Cam and scroll down to the last line to check your camera's IP address “192.168.197.226”. The IP address may vary, please refer to the actual address.

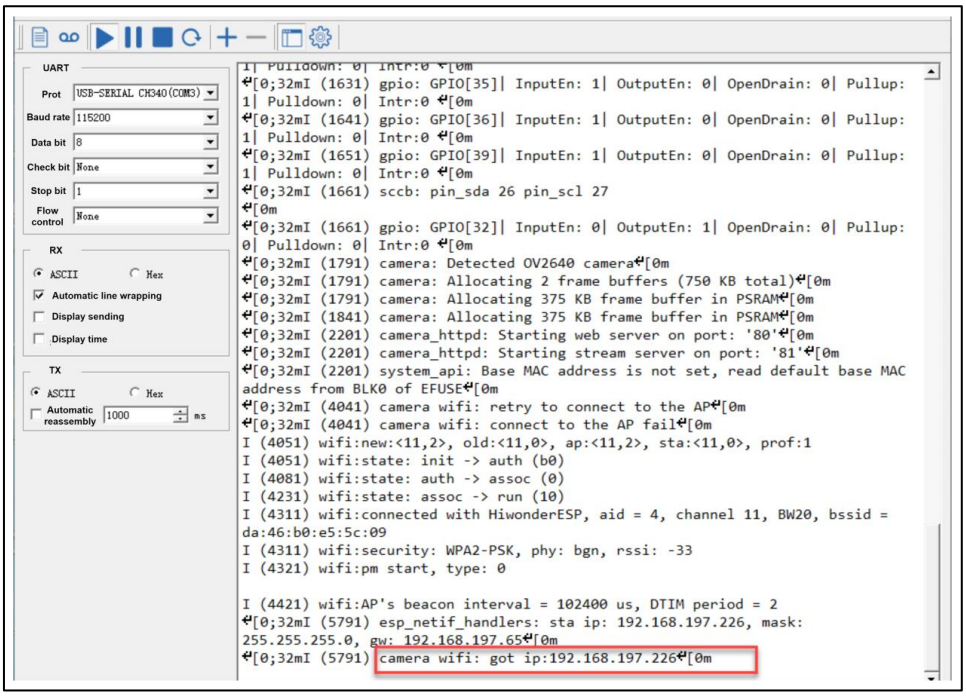

7) At this time, you can disconnect the Type-C cable and connect the computer to the same hotspot as the camera.

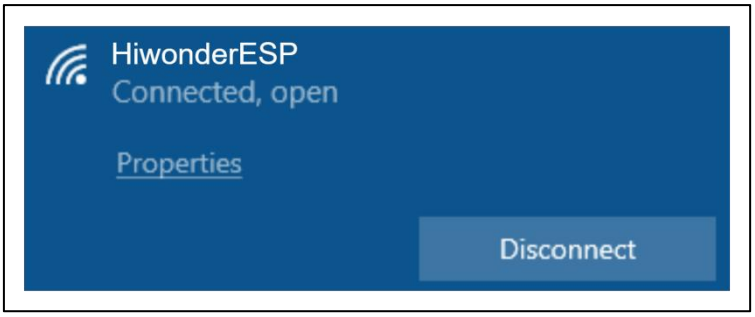

8) In the browser’s research bar, enter the IP address of the camera “192.168.197.226” to to access the feedback interface.

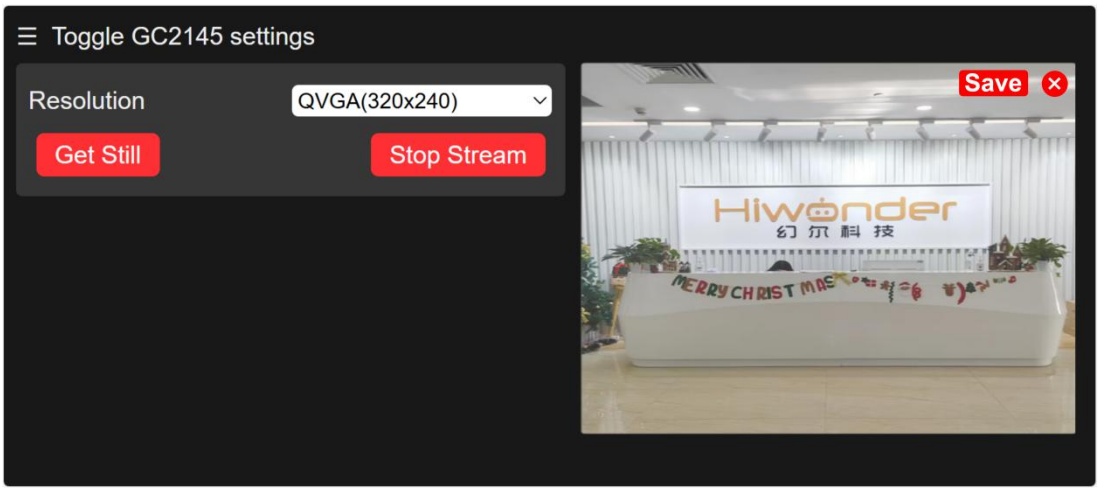

2. Image Postback Firmware Flashing (Optional)

1) Open the “flash_download_tool_3.9.7” file in the “8.1 ESP32S3-Cam Introduction and Installation\8.1.1 Firmware Flashing Tool”.

2) Select the “Chip Type” as “ESP32-S3”, and keep others unchanged. Click “OK”.

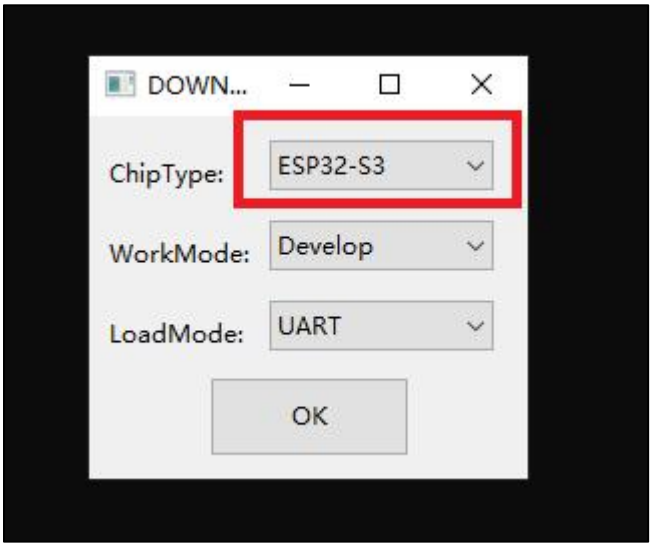

3) After opening the tool, click “...” to select the bin file of the program to be flashed. Take the following live camera feed function firmware as an

example:

4) Check the left side box, the rest of the configuration can be configured as shown below. Select the port number of the vision module occupied in the device as the COM port number .

Note: If you set SPI MODE to DIO as shown in the figure below, and the module cannot work properly after the firmware is flashed, please try setting SPI MODE to DOUT and flashing again.

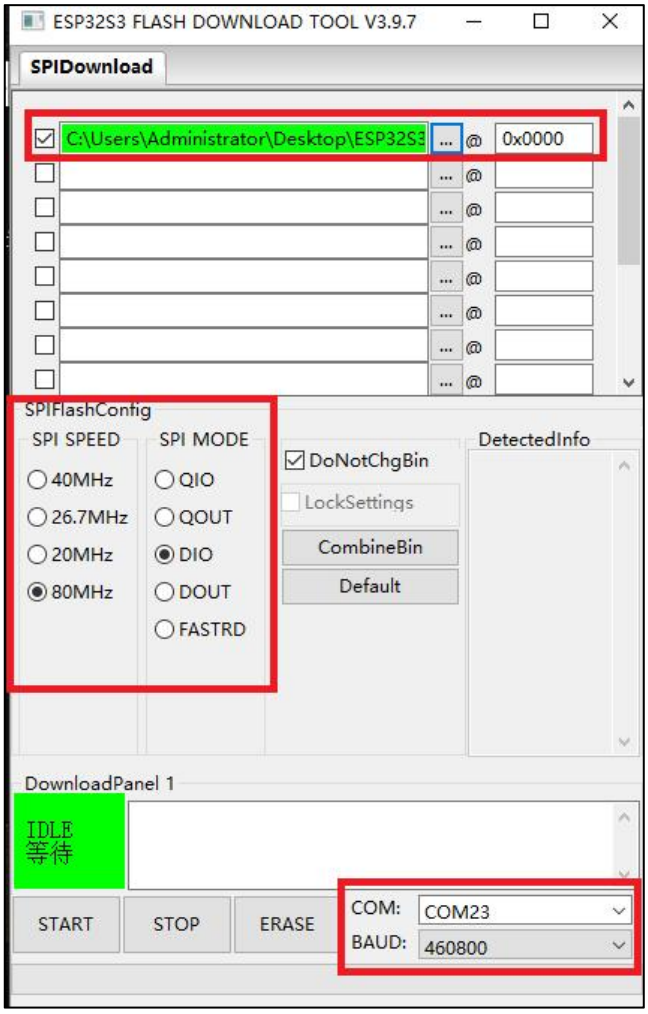

5) Click “ERASE” to erase the underlayer firmware. You must do this step first. Next, click “START” to start flash. Then, wait for the download to be completed.